orluna

muro
origin

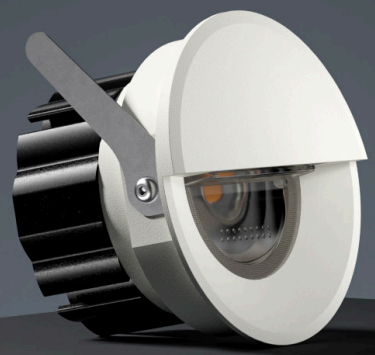

IP65
IP54

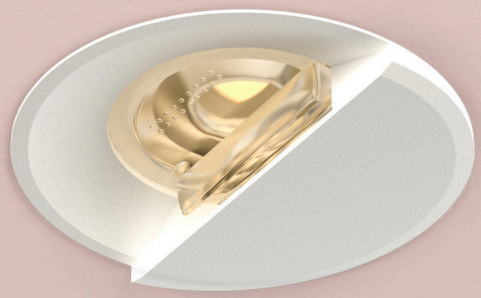

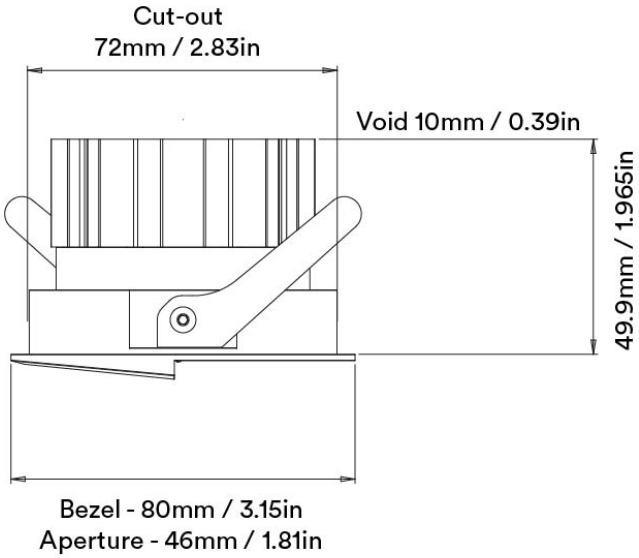

ORLUNA LED Technologies Limited,
Unit C, Holly Industrial Park,
Ryan Way, Watford,
Hertfordshire WD24 4YP
United Kingdom

info@orluna.com

+44 (0) 1923 889 712

muro origin

orluna

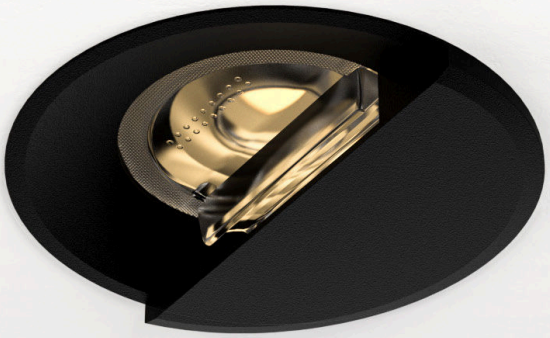

muro spacing guide

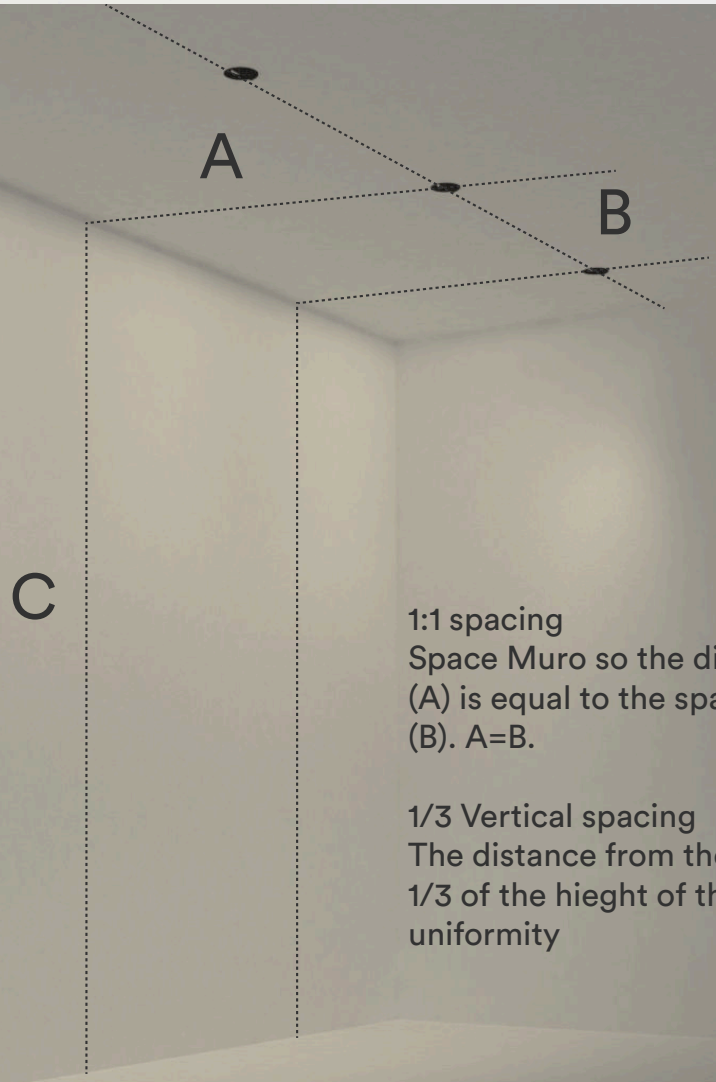

1:1 spacing
Space Muro so the distance from the wall (A) is equal to the spacing of the luminiares (B). A=B.

1/3 Vertical spacing
The distance from the wall (A) should be 1/3 of the hieght of the wall (C) for even uniformity

ORLUNA LED Technologies Limited,
Unit C, Holly Industrial Park,
Ryan Way, Watford,
Hertfordshire WD24 4YP
United Kingdom

info@orluna.com

+44 (0) 1923 889 712

muro origin

orluna

		2700K
		SPECIALITY
LIGHT VALUES	Beam Width FWHM	Wallwash Asymmetrical
	Initial Lumens	1164
	Engine Lumens	985
	Luminaire Lumens	985
	Engine Lm/W	86
	Luminiare Cd	823
POWER	Voltage	34V
	Drive Current	300mA
	Circuit Power (typ)	11.4W

		3000K
		SPECIALITY
LIGHT VALUES	Beam Width FWHM	Wallwash Asymmetrical
	Initial Lumens	1252
	Engine Lumens	943
	Luminaire Lumens	943
	Engine Lm/W	83
	Luminiare Cd	819
POWER	Voltage	34V
	Drive Current	300mA
	Circuit Power (typ)	11.4W

	Binning SDCM (Hot)	2
	CRI (typ)(R9)	98 (99)
	TM30 Rf Rg	Rf 93.8 Rg 100.9
	Lifetime (TM21)	L90 B5 50,000hrs (inc driver)
	Lifetime (Calculated)	L70 426,000hrs
DRIVER	Protocols	Mains Dim / DALI / 0-10V / Non-dim
	Dim to Dark	0.1% Lux
	Distance from LED	20m / 65' (series wiring)
	Emergency	Emergency packs available

02/07/20

SPECIFICATION CODE

Engine type		Bezel		Colour Temp	Driver	Beam Width		Bezel Colour		Options
OR	-	MU	-	27	M	A	-	W	-	F 54 E
				27 / 2700K 30 / 3000K 40 / 4000K	**M / Mains Dim** D / DALI 0 / 0-10v N / Non Dim X / No Driver	**A / Asymmetrical**		**W / White RAL 9010** D / White RAL 9003 E / White RAL 9016 B / Black RAL 9005 C / Other RAL		**F / 60 min Fire Rated Plate** **54 / IP54** 65 / IP65 P / Sea & Spa IP65 *C / Constant Torsion **E / 3hr Emergency** Z / LSZH Cable K / Click Connector

*NOTE: Fire Hood if used with constant torsion springs

ORLUNA LED Technologies Limited,
Unit C, Holly Industrial Park,
Ryan Way, Watford ,
Hertfordshire WD24 4YP
United Kingdom

info@orluna.com

+44 (0) 1923 889 712