Minude Surface Adjustable 45 2x LED Spot DE

139420XX_139430XX

1

MOUNT LED DRIVER REMOTE AND ACCESSIBLE

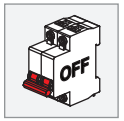

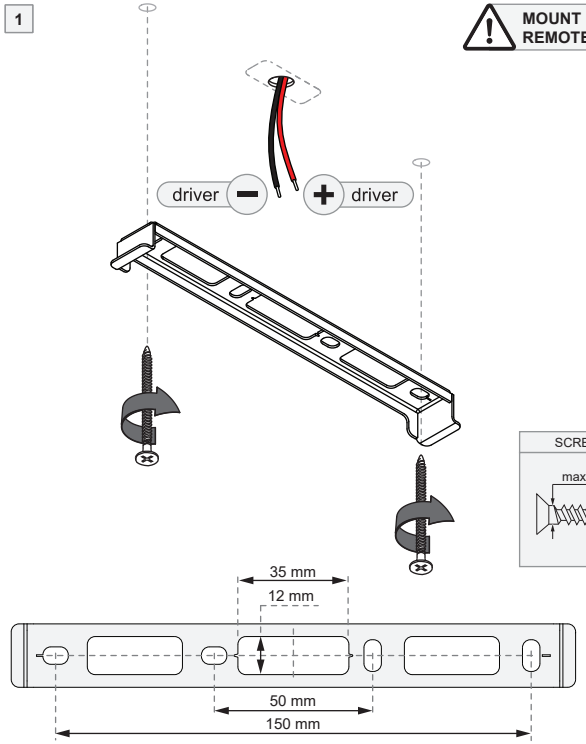

SCREWS NOT INCLUDED

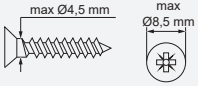

ELECTRICAL SPECS FIXTURE			
Drive Current (mA)	Forward Voltage		Power (W)
	min (Vf)	max (Vf)	
350	22,4	26,4	8,2
500	22,4	26,4	12,2
+ RED		− BLACK	

For serial connection, respect polarity!
Not suited for connection to mains voltage.
Combine with a Modular LED-driver.

SERIAL CONNECTION 1 DRIVER

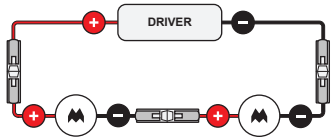

Always use a serial connection for multiple luminaires on a single driver!
Only use luminaires with the same input ratings!

ELECTRICAL SPECS LED			
Drive Current (mA)	Forward Voltage		Power (W)
	min (Vf)	max (Vf)	
350	11,2	13,2	4,1
500	11,2	13,2	6,1
+ RED		− BLACK	

For serial connection, respect polarity!
Not suited for connection to mains voltage.
Combine with a Modular LED-driver.

1 LED 1 DRIVER **1 LED 1 DRIVER**

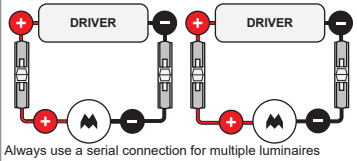

Always use a serial connection for multiple luminaires on a single driver!
Only use luminaires with the same input ratings!

DRIVERS & ACCESSORIES	For latest version of driver matrix and available accessories check www.supermodular.com or connect with your sales contact.

2

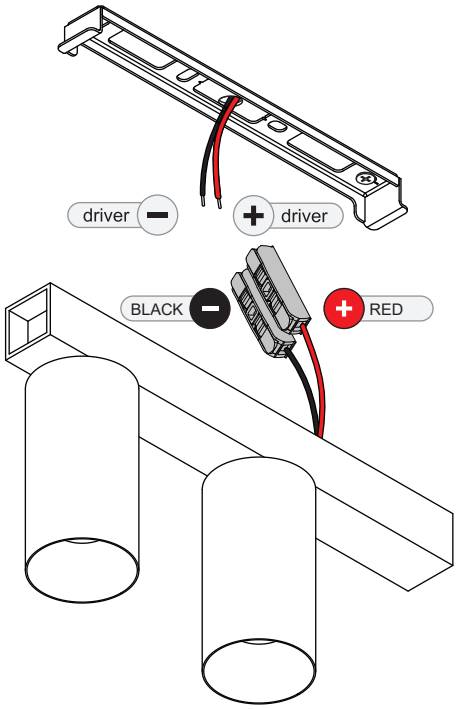

3

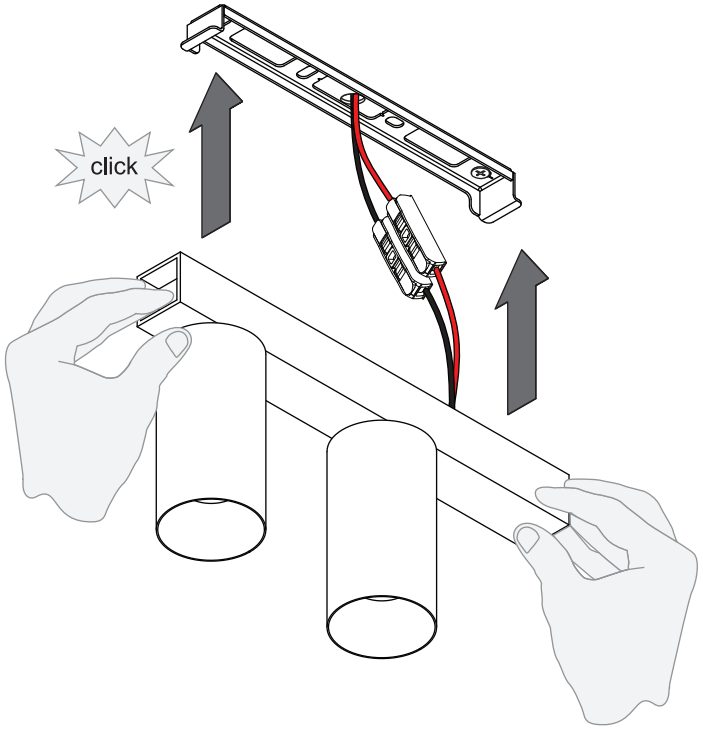

4

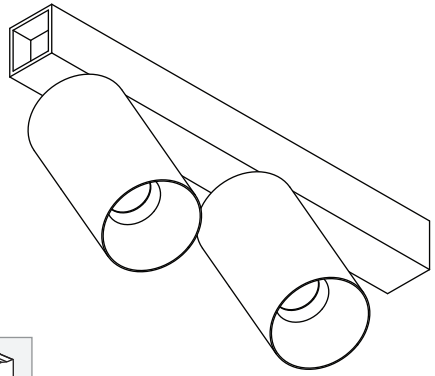

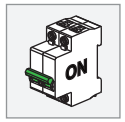

ONLY TO BE INSTALLED OUTSIDE ARM'S REACH

5 **UNINSTALL**

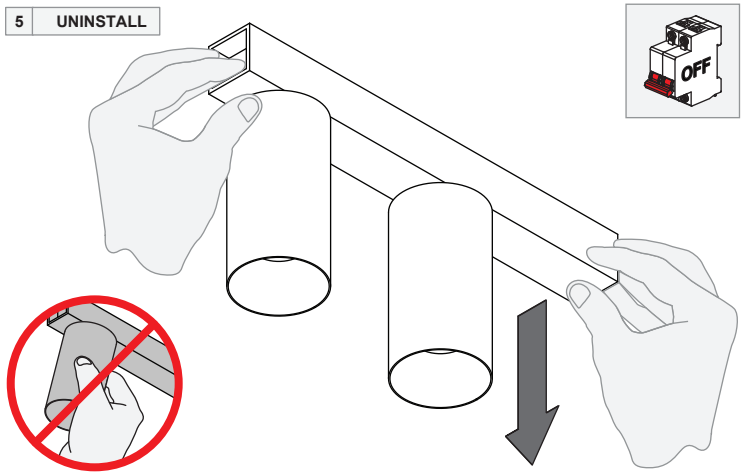

01 - 31/03/2025

III IP 20 UK CA CE